Application Note

TruDO

Dissolved Oxygen Sensor Primer

Dissolved Oxygen (DO) is the term used for the measurement of the amount of dissolved oxygen present in a unit volume of water. In bioprocess applications, such as cell culture or fermentation, the level of DO must be kept high enough for the organisms to thrive, but not so high as to cause unnecessary turbulence during the aeration of the water. Although dissolved oxygen (DO) is usually displayed as %, mg/L or ppm, DO sensors do not measure the actual amount of oxygen in water, but instead measure the partial pressure of oxygen in water, which is dependant on both salinity and temperature.

In this technical note, Henry's law is reviewed, and various types of dissolved oxygen sensors are described. The operating principles behind the TruDO sensor, which is a Clarke electrode, are also presented. Finally, the performance and reliability benefits of the TruDO sensor design are summarized.

Factors Determining Solubility of Oxygen in Water

The amount of dissolved oxygen (DO) that can be present in a given volume of water is primarily a function of three factors:

- the atmospheric pressure at the water-air interface
- the temperature of the water
- the amount of other dissolved substances (e.g., salts, sugars, or other gases) present in the water

Pressure

The partial pressure of oxygen depends on the gas mixture and total pressure inside the bioreactor (see equation 1). Therefore, DO readings must take into consideration any differences between the process and calibration pressures. The pressure values must, in turn, account for elevation above sea level and/or overpressure in the vessel. Any significant process pressure variations will lead to DO measurement errors.

Insight into the pressure dependence of the dissolved oxygen concentration in water can be understood by considering Dalton's law of partial pressures. This law states that if different gases are mixed in a confined space of constant volume at a set temperature, then each gas will exert the same pressure as if it alone occupied this space. The pressure of the mixture as a whole is the sum of the partial pressures of each of the gases comprising the mixture:

$$P_T = p_1 + p_2 + p_3 \ldots \quad (1)$$

Dalton's law simply states that the partial pressure of each gas component in a mixture is what the pressure of that gas component would be if all other gases present in the mixture suddenly vanished, without changing the temperature of the gas remaining. When Dalton's law is combined with the ideal gas law, the partial pressure of each gas in a mixture is proportional to the number of molecules of that gas in the mixture. For example, dry air is 20.948% oxygen. Therefore, when air is bubbled through water, only about 20% as much oxygen is dissolved in the water as would dissolve if pure oxygen instead of air at the same pressure was used.

It is also important to note that the concentration of dissolved oxygen follows Henry's law: i.e., it is linearly proportional to the total pressure. In accordance with Henry's law, the molar concentration of dissolved oxygen in water can be calculated from the partial pressure as:

$$x_{O_2} = K_{O_2}\, p_{O_2} \quad (2)$$

where xO_2 is the molar concentration of oxygen in mol/L, KO_2 is Henry's constant (1.28×10^{-3} mol/L-atm @ 25°C) and pO_2 is the partial pressure of oxygen in atm. Henry's constant will vary with the process temperature. Henry's law simply states that the solubility of a gas in a liquid is directly proportional to the pressure of that gas above the liquid. As the pressure of the air above the aqueous solution is increased, more oxygen will become dissolved in the solution, and the DO concentration will increase. When using Henry's law for determining dissolved oxygen in a fermenter/bioreactor, one must account for the fact that the air in the reactor is saturated with water. This issue is discussed in the "Calibrating TruDO Sensors" application note.

Finesse, LLC
3350 Scott Boulevard #1
Santa Clara, CA 95054

9351 Irvine Boulevard
Irvine, CA 92618

www.finesse-inc.com

Temperature

The temperature dependence of the dissolved oxygen concentration results from changes in the solubility of oxygen in water with temperature: i.e., the solubility is greater in cold water than in warm water. To illustrate the temperature dependence, recall bubbles forming in a pot of water right before it begins to boil; these bubbles are oxygen that was dissolved at room temperature, but is being ejected as the water temperature rises.

Why does this happen? Oxygen can slip into the crevasses or "holes" that exist in the loose hydrogen-bonded network of water molecules without forcing them apart. The oxygen is then caged by water molecules, which weakly pin it in place. A very physical perspective on solubility of oxygen in water is that when the water is colder, the water molecules move less, and the oxygen remains trapped in the aqueous solution. (A thermodynamic perspective is that the dissolution process is slightly exothermic, so that cooling the water shifts the equilibrium towards higher concentrations of dissolved oxygen.)

The temperature dependence of oxygen solubility is often calculated as a function of vapor pressure. This effect can be accounted for by application of the Clausius-Clapeyron equation (http://en.wikipedia.org/wiki/Clausius-Clapeyron_relation).

Other Substances

Other dissolved substances will affect the ability of oxygen to dissolve in water at the same temperature and pressure, because there is less "room" for the oxygen in the water, and, in addition, oxygen is less water soluble than most salts, whose solubility increases with temperature. Table 1 shows the relationship of DO (in mg/L) to temperature and salinity. Table 2 provides water solubility data for common bioprocess gases and salts as a function of temperature.

Table Oxygen Saturation (in ppm) Based on Temperature and Salinity

Temp (°C)	Salinity (parts per thousand)					
	0	9	18.1	27.1	36.1	45.2
0	14.62	13.73	12.89	12.10	11.36	10.66
10	11.29	10.66	10.06	9.49	8.96	8.45
20	9.09	8.62	8.17	7.75	7.35	6.96
25	8.26	7.85	7.46	7.08	6.72	6.39
30	7.56	7.19	6.85	6.51	6.20	5.90
40	6.41	6.12	5.84	5.58	5.32	5.08

Table 2 Solubility as a function of temperature (mg solute per liter of water):

Solute	Temperature (°C)					
	0	20	40	60	80	100
O_2	69	43	31	14		
CO_2	3350	1690	970	580		
NaCl	357,000	360,000	366,000	373,000	384,000	398,000
KCl	276,000	340,000	400,000	455,000	511,000	567,000

The relationship between temperature, salinity, and dissolved oxygen can be approximated using the equation:

$$\ln(C) = -139.34 + (1.5757 \times 105/T) - (6.6432 \times 107/T^2) + (1.2438 \times 1010/T^3) \quad (3)$$

$$- (8.6219 \times 1011/T^4) - S\,[1.7674 \times 10\text{-}2 - (10.754/T) + (2.1407 \times 103/T^2)]$$

where T is the solution temperature (in degrees Kelvin), S is the salinity (in parts per thousand), and C is the oxygen concentration (in mg/L). From Table 2 we see that increasing the solution temperature usually increases the solubility of solids and liquids whereas it reduces the solubility of gases

Finesse, LLC
3350 Scott Boulevard #1
Santa Clara, CA 95054

9351 Irvine Boulevard
Irvine, CA 92618

www.finesse-inc.com

The concentration of dissolved oxygen is also measured in units of % saturation. % saturation is simply the ratio of the measured mg/L of dissolved oxygen divided by the mg/L of dissolved oxygen at saturation—as given in Table 1. Note that saturation levels are ratios, and depend on the operating conditions: i.e., temperature, salinity, and pressure, therefore, saturation % units can only be used if the calibration at 100% saturation was performed under the same operating conditions, and no further changes in the process operating conditions are anticipated. Otherwise, % saturation units must be adjusted appropriately.

Galvanic and Polarographic Sensor Technologies

Several technologies for DO detection, such as optical methods, are still in development, and will be addressed in a separate technical note. Due to years of research and interest in electrochemical cells, there is an extensive body of knowledge on these devices and tabulated data on the potential provided by various electrodes (for example, please refer to the website: http://chem.ch.huji.ac.il/~eugeniik/refelectrodepoten.htm).

Our discussion here will focus on the two types of electrochemical sensors that are currently available for measuring dissolved oxygen (DO): i.e., galvanic and polarographic. Both types of sensor use an electrode system where the DO reacts with the cathode to produce an electrical current. If the electrode materials are selected such that the difference in potential between the cathode and the anode is -0.5 Volts or greater, an external potential is not required, and the system is called galvanic. If an external voltage must be applied to the sensor, the system is called polarographic.

In galvanic sensors, the anode and cathode are both immersed in an electrolyte, into which oxygen permeates through a membrane. The galvanic sensor converts the oxygen concentration into a voltage (via a sacrificial anode) that is proportional to the amount of DO. Therefore, the sensor has an absolute zero, namely, when no DO is present, the sensor will read “zero” to within the limit of the electronics. In general, galvanic sensors are more stable and accurate at low DO levels, and can operate for several months without electrolyte or membrane replacement.

Polarographic sensors exploit an amperometric technique using a Clark cell, so named after Leland C. Clark (http://chem.ch.huji.ac.il/~eugeniik/history/clark_leland.htm). In polarographic sensors, the anode and cathode are immersed in an electrolyte, into which oxygen permeates through a membrane. It differs from a galvanic sensor in that the anode must be polarized, after which a current flows in the sensor. At zero dissolved oxygen, the sensor has an offset for which the readout electronics must be compensated, and which changes as the sensor ages. Furthermore, as the oxygen permeable membrane ages, the operating characteristics of the sensor also change. Polarographic sensors must be charged or polarized during use and carefully calibrated prior to each bioprocess run for maximum accuracy.

The major difference between the galvanic and polarographic sensors is in the choice of electrode materials, which determines their suitability for bioprocess applications. Galvanic sensor electrodes are generally made from lead, so the sensor is self-polarizing, i.e. the voltage is generated in the sensor by the electrodes themselves, comparable to the process in a battery. Polarographic electrodes, however, are often made using silver, which requires a voltage in order to activate the oxygen permeation process. Polarographic sensors, owing to their more biocompatible electrode materials, are commonly used in bioprocesses today. Nevertheless, relevant information on the galvanic sensor will also be presented.

Galvanic Sensors

As seen in figure 1, galvanic DO sensors consist of two electrodes, an anode and cathode which are both immersed in electrolyte (contained inside the sensor body). The electrodes provide a high enough potential for the reduction and oxidation of oxygen. This means that there is no need to provide an external potential or “polarize” the electrodes. An oxygen permeable membrane

Finesse, LLC
3350 Scott Boulevard #1
Santa Clara, CA 95054

9351 Irvine Boulevard
Irvine, CA 92618

www.finesse-inc.com

separates the anode and cathode from the solution being measured. Oxygen diffuses across this membrane and interacts with the anode and cathode to produce an electrical current. The current between the anode and cathode passes across a thermistor (i.e., a resistor that changes output with temperature) in order to produce an output voltage (typically in millivolts).

The thermistor concurrently corrects for temperature effects on membrane permeability. For the same oxygen pressure, higher operating temperatures will increase the amount of oxygen diffusion into the sensor due to increased membrane permeability, thus resulting in more current; simultaneously, however, higher temperatures change the thermistor resistance, so that the output produced stays constant. In other words, a thermistor can compensate for potentially false DO readings. For more accurate DO measurements, a separate and independent (often integrated) temperature sensor is used to measure the temperature and directly compensate for the membrane permeability changes. The sensor output voltage is then converted to ppm, %, or mg/L of DO.

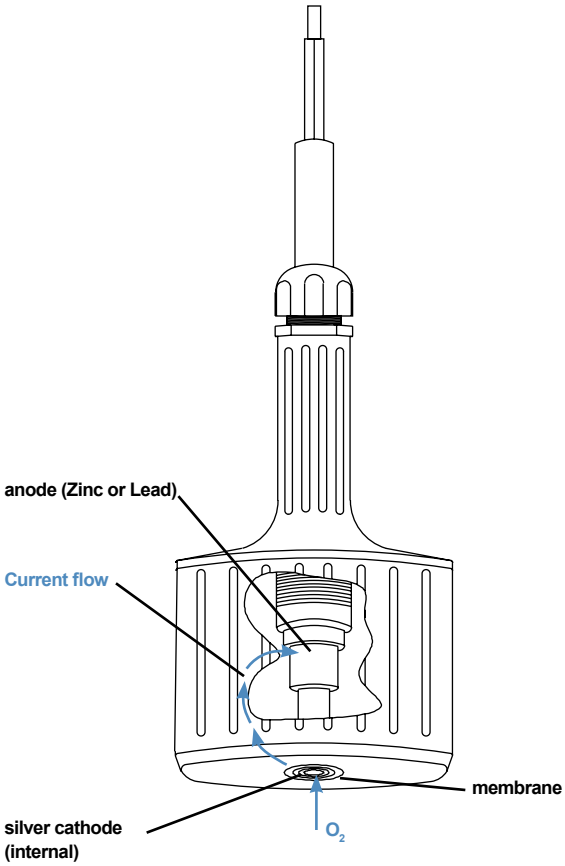

Figure 1 **Schematic of a galvanic dissolved oxygen sensor**

Polarographic Sensors

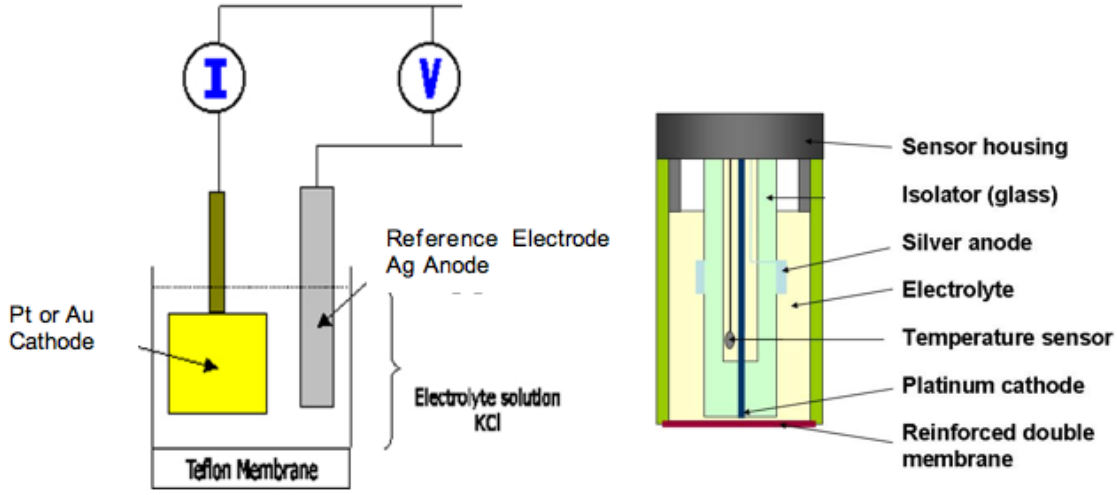

Figure 2 **(left) Schematic of a polarographic cell having a noble metal cathode and a reference electrode anode, and (right) TruDO Clark cell schematic diagram**

In the polarographic (or Clark) cell shown in Figure 2 (left), a cathode of a noble metal (platinum, gold, or paladium) is made negative by 0.6 to 0.8 Volts with respect to a suitable reference anode (Ag/AgCl electrode in a neutral KCl or KBr solution), so that any oxygen dissolved in the liquid is reduced at the surface of the noble metal cathode. The TruDO Clark cell configuration is shown in Figure 2 (right).

The anode/cathode pair causes current to flow in direct proportion to the amount of oxygen entering the system. The magnitude of the current thus gives us a direct measure of the amount of oxygen entering the probe (Figure 3). Because the oxygen entering the probe is chemically consumed, the partial pressure of oxygen in the electrolyte tends toward zero. Therefore, a partial pressure gradient exists across the membrane

Finesse, LLC
3350 Scott Boulevard #1
Santa Clara, CA 95054

9351 Irvine Boulevard
Irvine, CA 92618

www.finesse-inc.com

and the rate of oxygen entering the probe is a function of the partial pressure of oxygen in the air or water being measured. The gradient helps continually drive new oxygen molecules across the membrane and into the electrolyte.

As the negative voltage applied to the noble metal electrode is increased, the current will initially increase but eventually saturates (Figure 4a). In this plateau region, the reaction of oxygen at the cathode is so fast, that the rate of reaction is limited by the diffusion of oxygen to the cathode surface. Further increases in the negative bias voltage will eventually reach a point where the current output of the electrode increases rapidly due to other reactions, mainly, the reduction of water to hydrogen. Ease of use, linearity, and calibration dictates biasing the electrodes such that it operates on the plateau.

If a fixed voltage in the plateau region (for example, - 0.7V) is applied to the cathode, the current output of the electrode can be linearly calibrated to the dissolved oxygen (Figure 4b). A fixed voltage between -0.6 and -0.8 V is usually selected as the polarization voltage when using Ag/AgCl as the reference electrode. The current produced by the cell is proportional to the oxygen partial pressure and closely approximates the activity of oxygen.

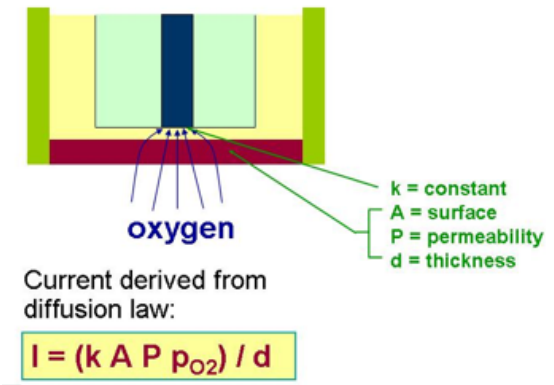

Figure 3 Relationship between current and partial pressure of oxygen in a Clark electrode

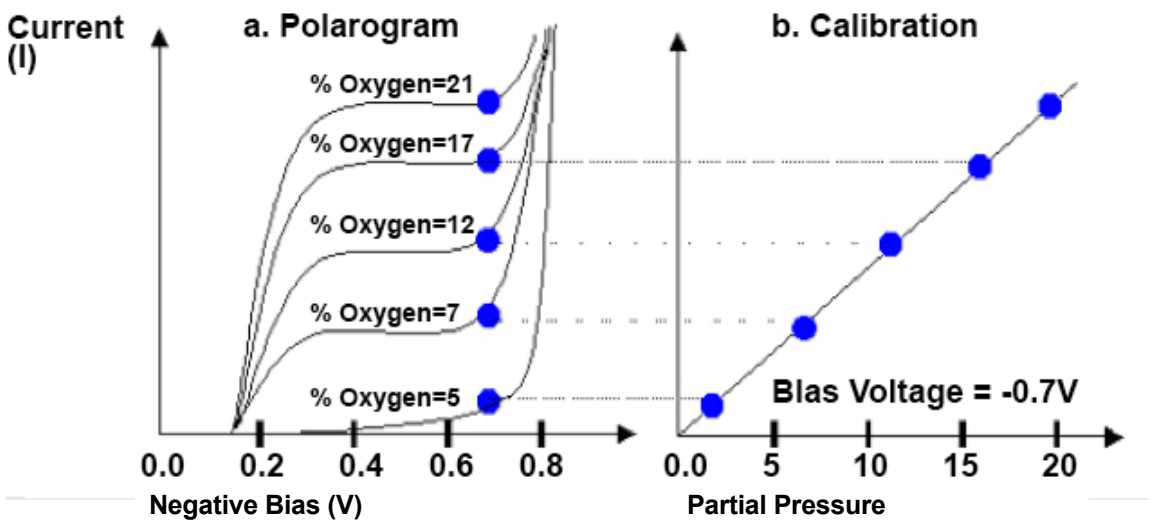

Figure 4 (a) Family of polarographic current response curves obtained by varying the negative bias and the oxygen partial pressure, and (b) linear sensor response to oxygen for a fixed negative bias voltage (from http://www.eidusa.com/Theory_DO.htm)

As the oxygen is consumed by the Clark cell cathode, a pressure gradient is created across the membrane. The result is a constant rate of oxygen diffusion across the membrane which is proportional to the partial pressure of O2 in the water. The membrane, which is very often a fluoro-polymer (e.g.: Teflon), is oxygen permeable, but by design is not permeable to other dissolved solids/ions (or many gases) that might be present in solution.

Consider the detailed oxygen reduction reaction for a Clark cell constructed using Ag/AgCl and gold electrodes, and using aqueous KCl as the electrolyte. In order for the oxygen to undergo reduction, a potential between 400 to 1200 mV must be present; a voltage of 700 mV is typically applied to the cell from an external source. The total reaction that occurs can be broken down into the reactions occurring at each electrode:

Cathode (Reduction): $O_2 + 2H_2O + 4e^- \rightarrow 4OH^-$ (4)

Anode (Oxidation): $4Ag + 4Cl^- - 4e^- \rightarrow AgCl$

The overall reaction that occurs is summarized in equation 5:

Overall: $4Ag + O_2 + 2H_2O + 4Cl^- \rightarrow 4AgCl + 4OH^-$ (5)

Finesse, LLC
3350 Scott Boulevard #1
Santa Clara, CA 95054

9351 Irvine Boulevard
Irvine, CA 92618

www.finesse-inc.com

From equation 3, it can be seen that every time an oxygen molecule is reduced, 4 electrons are generated and the cathode is "depolarized". These electrons lead to a current that is related to the partial pressure of the dissolved oxygen, and that can be found by accounting for all the aforementioned effects. The current can be calculated from:

$$i_d = \frac{4\,F\,P_m(t)\,A\,p_{O2}}{d} \qquad (6)$$

where Faraday's constant, F, is 9.64 x 10^4 C/mol, Pm(t) is the permeability of the membrane (which is a function of temperature), A is the surface area of the noble metal electrode, pO_2 is the partial pressure of oxygen, and d is the thickness of the membrane. Typical currents i_d are on the order of 2 µAmps.

In all DO probes, the membrane/sample interface should have a few cm/sec of sample flow for precision performance. Note that the output of the probe increases (up to a point) with relative movement between the probe and sample. Without flow at the interface, the surrounding oxygen is consumed and the local reading drops.

Because the partial pressure of dissolved oxygen is a function of the temperature of the sample, the probe must be calibrated at the sample temperature or the probe's meter must automatically compensate for varying sample temperature. Figure 5 illustrates the maximum and minimum responses of DO probes to the oxygen in air, when the temperature of the air sample is varied. Note that the current response is non-linear as a function of temperature (the maximum response is almost quadratic), and that the response increases dramatically with temperature. Therefore, temperature calibration of the probe is important (see application note entitled "Calibration of TruDO sensors").

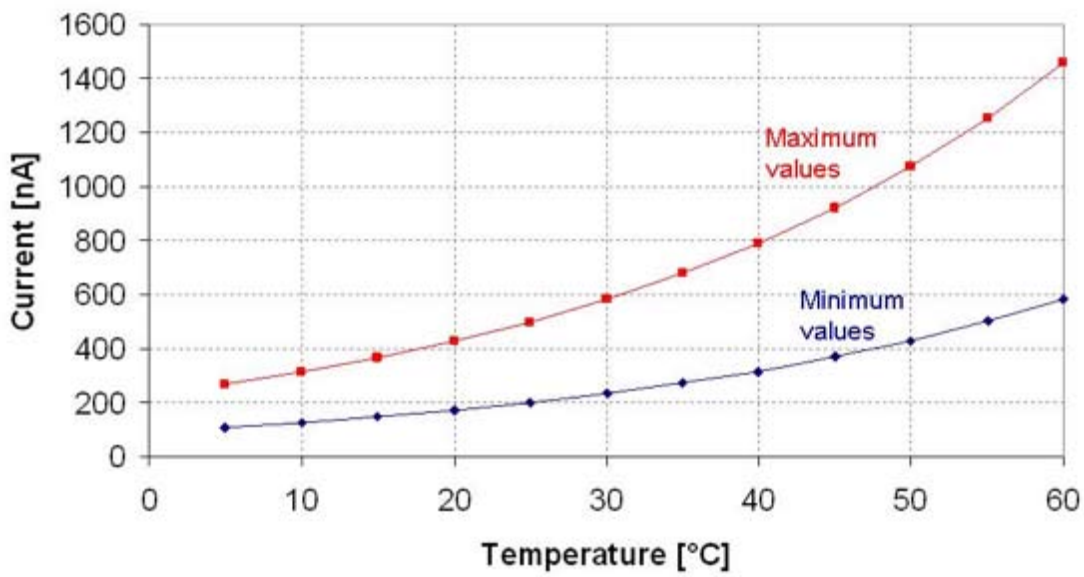

Figure 5 **Response of a DO probe to oxygen in air as a function of temperature**

Furthermore, the reading of a DO probe must be corrected for the amount of salt (or any other substance that can reduce the solubility of oxygen in water) in the sample. Salt in solution will reduce the actual concentration of oxygen.

A summary of the general characteristics of membrane-based TruDO probes is given below:

- pH of the solution does not affect the performance of TruDO probes.
- Atmospheric pressure (altitude above sea level) affects the saturation level for oxygen. TruDO probes must be calibrated for the barometric pressure when reading in mg/l (ppm).
- Membrane thickness determines the output level of the probe and the speed of response to changes in dissolved oxygen levels. TruDO probes are optimized for a combination of fast response and easily measurable output levels.
- salinity corrections must be made
- Excessive chlorine and hydrogen sulfide (H_2S) in solution can cause erroneous readings of dissolved oxygen.

Finesse, LLC
3350 Scott Boulevard #1
Santa Clara, CA 95054

9351 Irvine Boulevard
Irvine, CA 92618

www.finesse-inc.com